sensio
furniture lighting solutions

Universal Joining Clip

SE00178

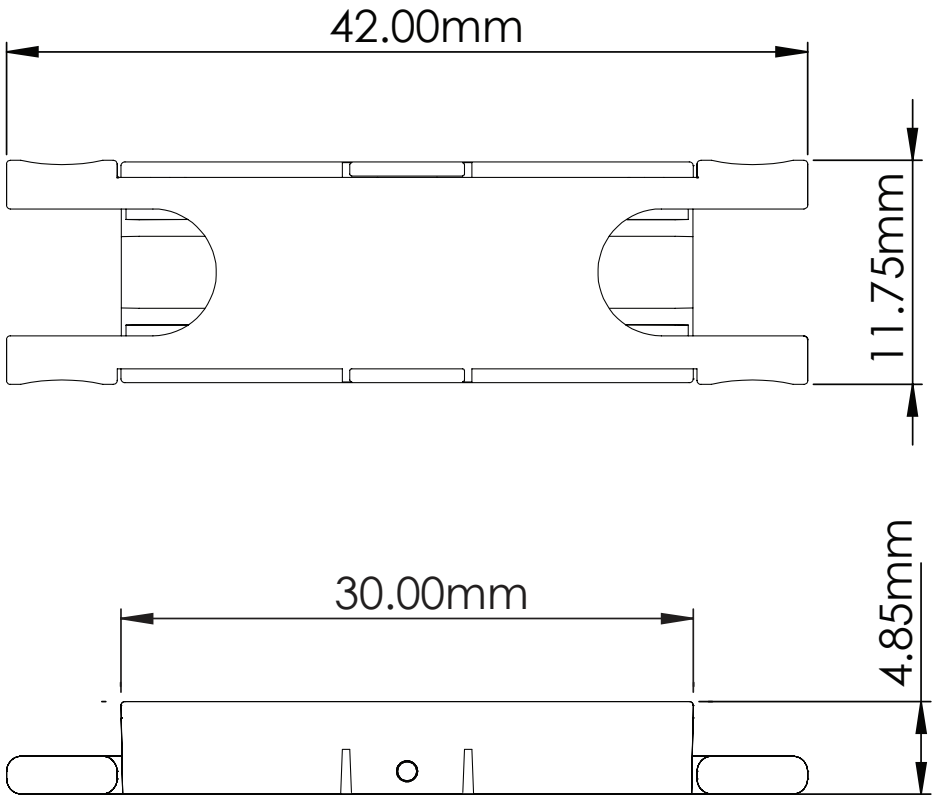

IMPORTANT INFORMATION ALL measurements in this document are set in MM (Millimetres)